Company name:	World Vision International in Somaliland
Created by:	Yahye Ali
Phone:	+252634204935
Email:	Yaxye_aadan@wvi.org
Date:	13/03/2025

Qty.	Description
1	**SQF 5A-7**

Note! Product picture may differ from actual product

Product No.: 95027342

The 4" SQF centrifugal pump is for low heads and large flow rates.

The SQFlex system is a reliable water supply system based on renewable energy sources, such as solar and wind energy.

Thanks to its flexible energy supply and performance, the SQFlex system can be combined and adapted to meet any need on the installation site.

The SQFlex system has a wide voltage range, built-in maximum power point tracking (MPPT) as well as dry-running, voltage and overload protection.

Company name:	World Vision International in Somaliland
Created by:	Yahye Ali
Phone:	+252634204935
Email:	Yaxye_aadan@wvi.org
Date:	13/03/2025

Qty.	Description
1	**IO 50 SWITCH BOX**

Note! Product picture may differ from actual product

Product No.: 93095688

IO 50 is designed for solar-powered SQFlex installations.
IO 50 enables manual starting and stopping of the pump in SQFlex solar systems.

Company name:	World Vision International in Somaliland
Created by:	Yahye Ali
Phone:	+252634204935
Email:	Yaxye_aadan@wvi.org
Date:	13/03/2025

Qty.	Description
1	**CU 202**

Note! Product picture may differ from actual product

Product No.: 92799796

CU 202 is designed for monitoring and controlling SQFlex submersible pumps in solar applications.

The simple user interface and built-in Bluetooth module ensure easy installation and configuration. The Bluetooth connection to the Grundfos GO app offers extensive setup and monitoring options.

CU 202 is pre-configured for tank filling, the most used application, offering a plug-and-pump solution, which saves time on commissioning.

For other applications, the controller provides several control modes, which can be easily selected and set through the Grundfos GO app.

Grundfos GO makes the configuration easier and allows installers to set up high-performing systems.

CU 202 communicates with the pump through the power cable. This communication principle is called mains borne signaling or powerline communication and means that no additional cables are required to the pump.

Grundfos GO offers detailed information and logs that help the installer to find the root cause in failure situations.

In addition, the controller can use Wi-Fi, GENIbus, or Modbus to monitor the system remotely either through Grundfos Connect or another SCADA system. Remote monitoring saves time when inspecting installations.

CU 202 is equipped with power and pump connections and offers 2 configurable inputs and outputs. Additionally, a backup battery can be added to the controller to maintain communication and measurements when solar power is insufficient.

The display of the controller shows:

- System status indication
  Alarm and warning indication

The pump can be turned on and off through the display of the controller.
The controller can display a read-out of the application-related data.
It is also possible to adjust the setpoint.
The LEDs on the display of the controller can be set to sleep mode, for example, to avoid attracting wildlife.

The following logs are available through Grundfos GO or remote monitoring:

- User setting log (25 entries)
  Alarms and warnings (50 entries)
  Installation log (filled out by the installer)
  Historic data for different intervals (total, today, and yesterday) for:
  - Operation time
  - Number of starts
  - Energy consumption
  - Volume pumped (provided that a flow meter is connected)

CU 202 indicates warnings and alarms on the display of the controller. Additionally, the Grundfos GO app provides further information on these events including the recommended solutions.

Company name:	World Vision International in Somaliland
Created by:	Yahye Ali
Phone:	+252634204935
Email:	Yaxye_aadan@wvi.org
Date:	13/03/2025

95027342 SQF 5A-7

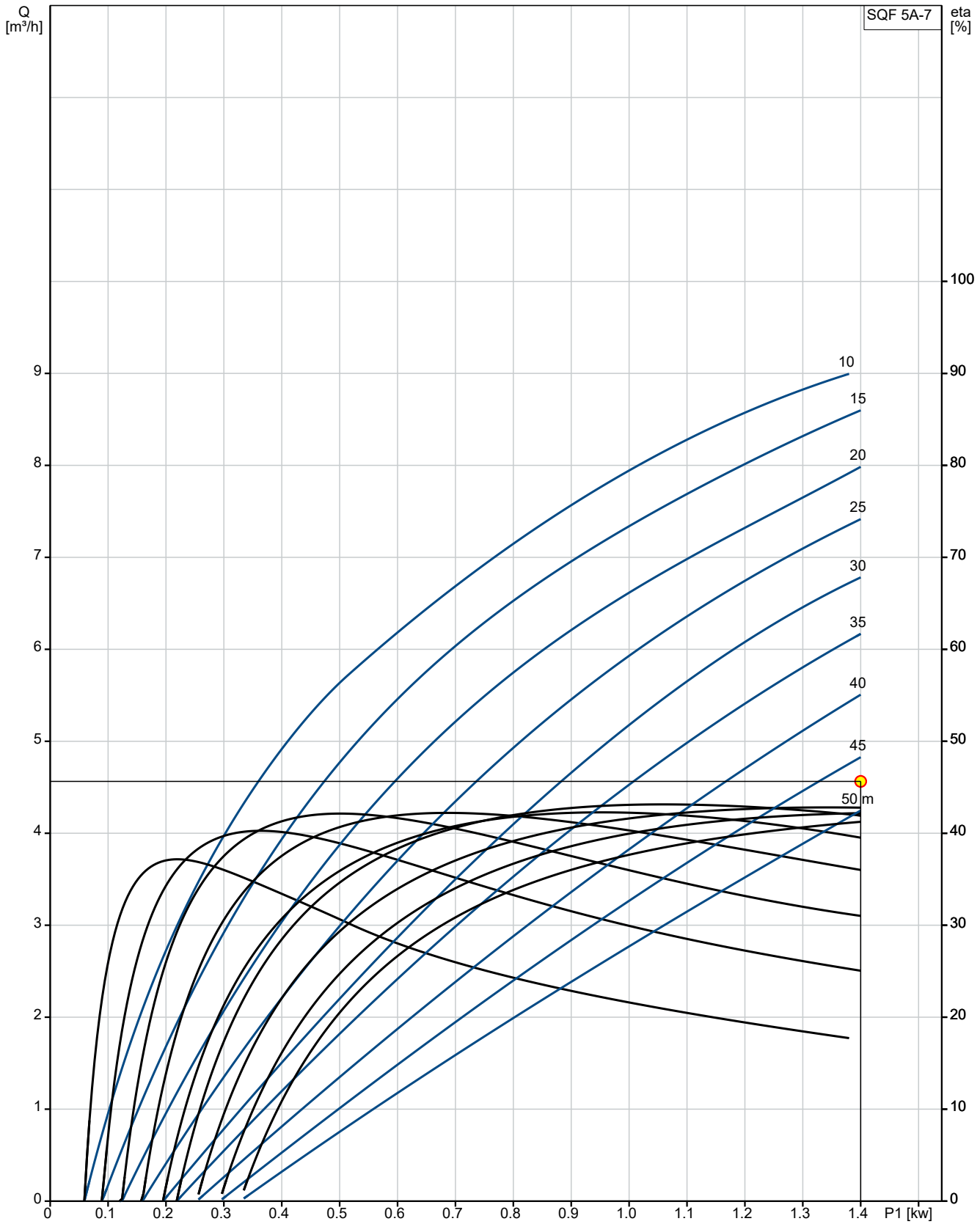

Q = 4.564 m³/h
P1 = 1.4 kW
Pumped liquid = Water

H = 47.28 m
Eta pump+motor = 41.9 %
Density = 998.2 kg/m³

Company name:	World Vision International in Somaliland
Created by:	Yahye Ali
Phone:	+252634204935
Email:	Yaxye_aadan@wvi.org
Date:	13/03/2025

Description	Value
General information:	
Product name:	SQF 5A-7
Product No:	95027342
EAN number:	5700834760310
Technical:	
Rated flow:	5 m³/h
Stages:	7
Approvals:	UKCA,CE,EAC,CN RoHS Exempt,Morocco, Sepro
Pump No:	95027393
Model:	B
Return valve:	Y
Zinc Anodes:	No
Materials:	
Pump:	Stainless steel
	DIN W.-Nr. 1.4301
	AISI 304
Impeller:	Stainless steel
	EN 1.4301
	AISI 304
Motor:	Stainless steel
	DIN W.-Nr. 1.4301
	AISI 304
Rotor:	DIN W.-Nr. 1.4301
	AISI 304
Stator:	DIN W.-Nr. 1.4301
	AISI 304
Installation:	
Maximum ambient pressure:	15 bar
Maximum operating pressure:	15 bar
Type of connection:	Rp
Size of connection:	1 1/2 inch
Minimum borehole diameter:	104 mm
Liquid:	
Pumped liquid:	Water
Liquid temperature range:	0 .. 40 °C
Electrical data:	
Motor type:	MSF3
Power input - P1:	1.4 kW
Rated power - P2:	1 kW
Rated voltage AC:	1 x 90-240 V
Rated voltage DC:	30-300 V
Rated current:	8.4 A
Power factor:	1.0
Rated speed:	3600 rpm
Start. method:	direct-on-line
Enclosure class (IEC 34-5):	IP68
Insulation class (IEC 85):	F
Built-in motor protection:	Y
Thermal protec:	internal
Length of cable:	2 m
Motor No:	96275336
Udc:	300 V
	30 V
Others:	
Minimum efficiency index, MEI ≥:	0.56
Net weight:	9.58 kg
Gross weight:	10.7 kg

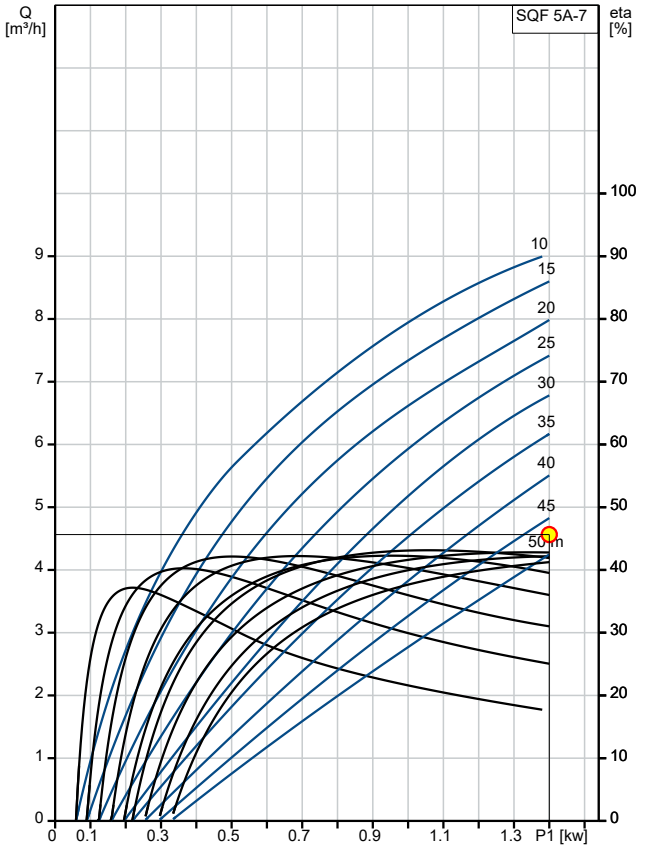

Q = 4.564 m³/h
P1 = 1.4 kW
Pumped liquid = Water

H = 47.28 m
Eta pump+motor = 41.9 %
Density = 998.2 kg/m³

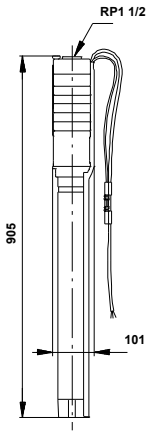

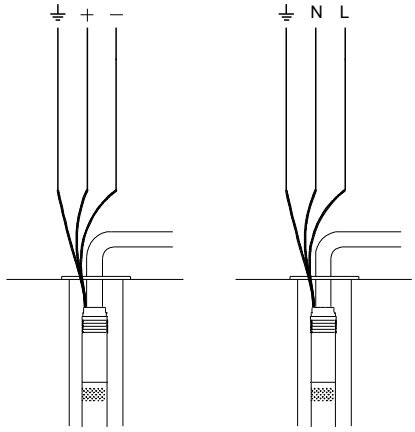

Company name: World Vision International in Somaliland
Created by: Yahye Ali
Phone: +252634204935
Email: Yaxye_aadan@wvi.org
Date: 13/03/2025

Description	Value
Shipping volume:	0.028 m³
Sales region:	Europe/South America/Japan

Company name: World Vision International in Somaliland
Created by: Yahye Ali
Phone: +252634204935
Email: Yaxye_aadan@wvi.org
Date: 13/03/2025

Description	Value
General information:	
Product name:	IO 50 SWITCH BOX
Product No:	93095688
EAN number:	5715467708578
Installation:	
Maximum ambient temperature:	45 °C
Electrical data:	
Rated voltage AC:	1 x 90-440 V
Rated voltage DC:	30-800/600 V
Rated current:	15/25 A
Enclosure class (IEC 34-5):	IP66
Enclosure type:	4X
Others:	
Net weight:	0.51 kg
Gross weight:	0.56 kg
Shipping volume:	0.002 m³
Total height:	180 mm
Total width:	98 mm

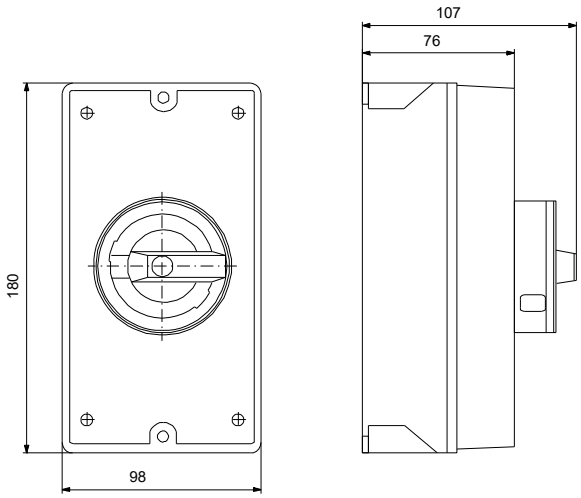

Description	Value
General information:	
Product name:	CU 202
Product No:	92799796
EAN number:	5715119769117
Technical:	
Approvals:	CE,EAC,RCM,UKCA
Cable gland entry:	2xPG11 + 2xPG21
Materials:	
Cabinet:	Plastic
Installation:	
Range of ambient temperature:	-20 .. 50 °C
Relative humidity:	5-95 %
Cabinet mounting:	Angle plate mounting
Earth connection:	PE
Electrical data:	
Power input P1:	25 W
Rated voltage AC:	1 x 90-240 V
Rated voltage DC:	30-300 V
Maximum current consumption:	12.5 A
Enclosure class (IEC 34-5):	IP55
Back-up fuse required:	16 A
IEC code battery designations:	CR2032
Battery chemistry:	LITHIUM
Others:	
Net weight:	1.62 kg
Gross weight:	1.95 kg
Shipping volume:	0.006 m³
Total height:	160 mm
Total width:	262 mm

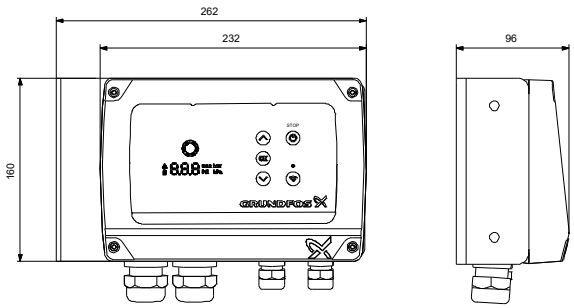

Company name: World Vision International in Somaliland
Created by: Yahye Ali
Phone: +252634204935
Email: Yaxye_aadan@wvi.org
Date: 13/03/2025

95027342 SQF 5A-7

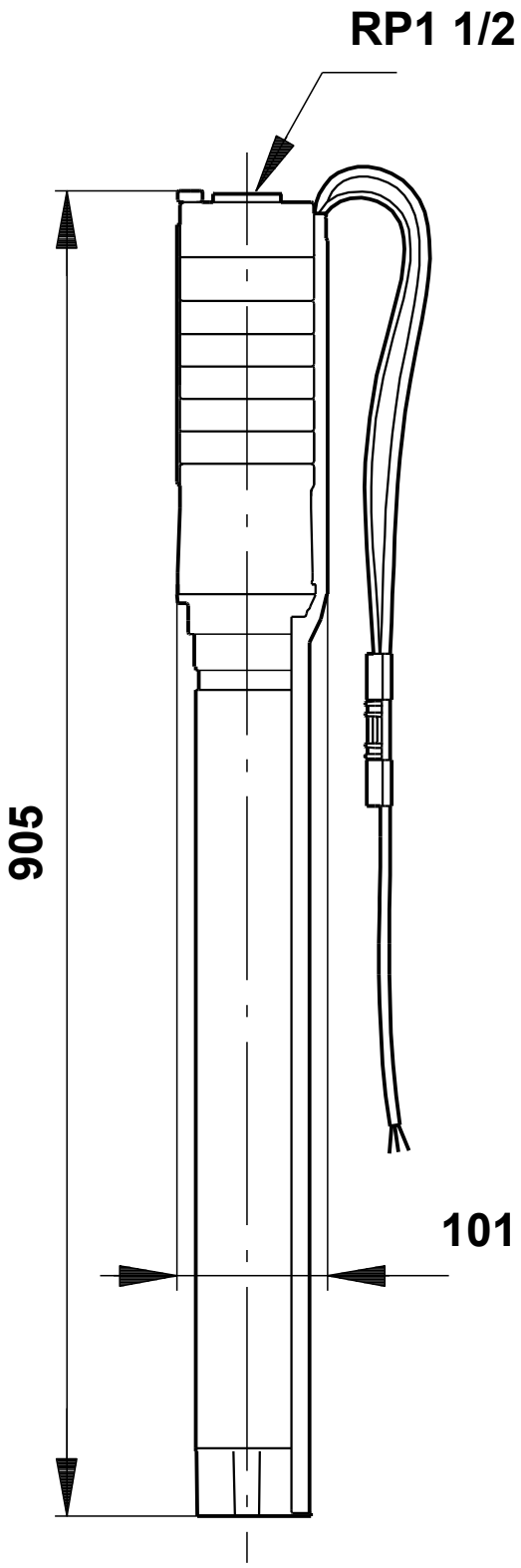

Note! All units are in [mm] unless others are stated.
Disclaimer: This simplified dimensional drawing does not show all details.

Company name: World Vision International in Somaliland
Created by: Yahye Ali
Phone: +252634204935
Email: Yaxye_aadan@wvi.org
Date: 13/03/2025

93095688 IO 50 SWITCH BOX

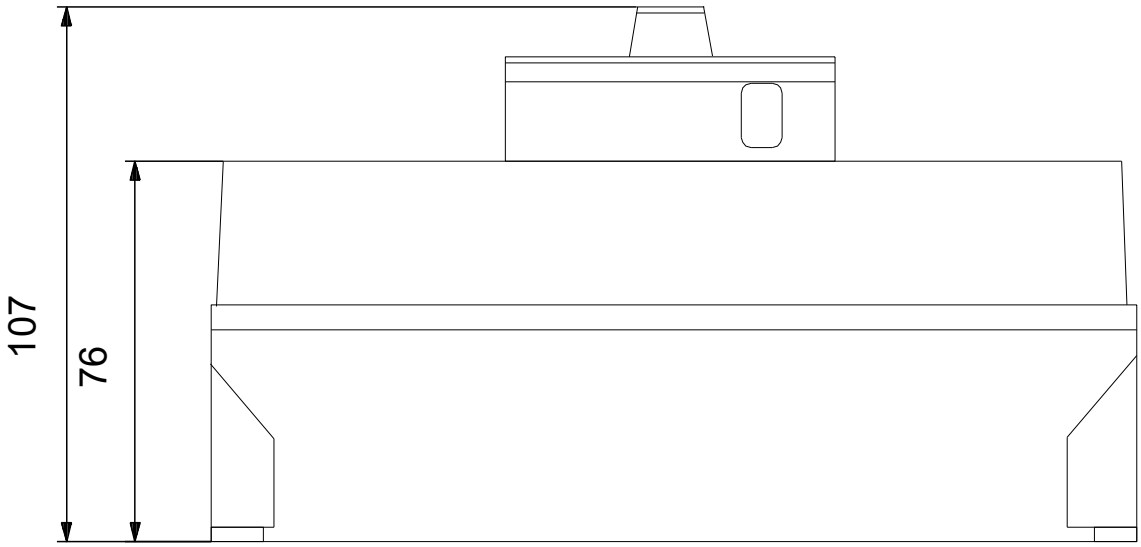

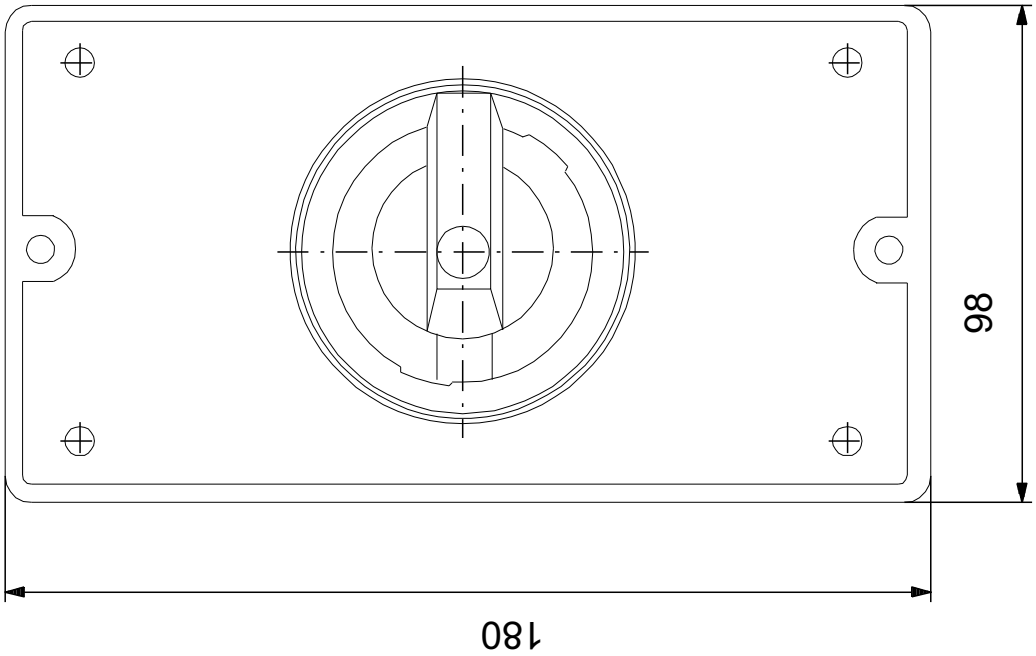

Note! All units are in [mm] unless others are stated.
Disclaimer: This simplified dimensional drawing does not show all details.

Company name: World Vision International in Somaliland
Created by: Yahye Ali
Phone: +252634204935
Email: Yaxye_aadan@wvi.org
Date: 13/03/2025

92799796 CU 202

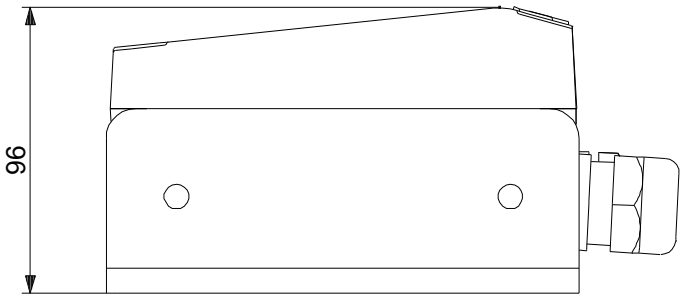

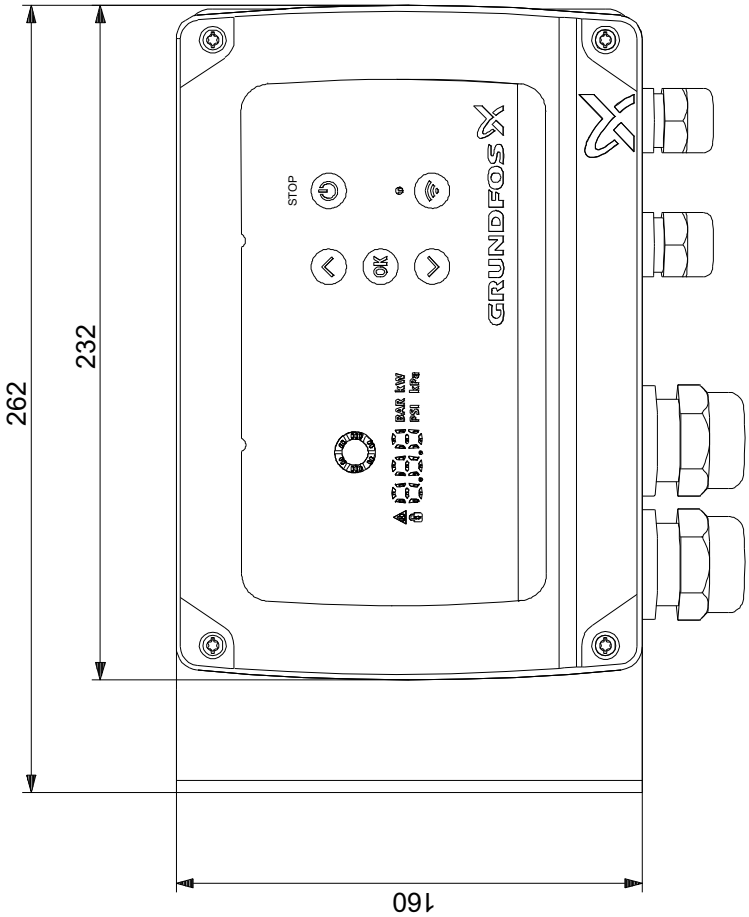

Note! All units are in [mm] unless others are stated.
Disclaimer: This simplified dimensional drawing does not show all details.

Company name: World Vision International in Somaliland
Created by: Yahye Ali
Phone: +252634204935
Email: Yaxye_aadan@wvi.org
Date: 13/03/2025

95027342 SQF 5A-7

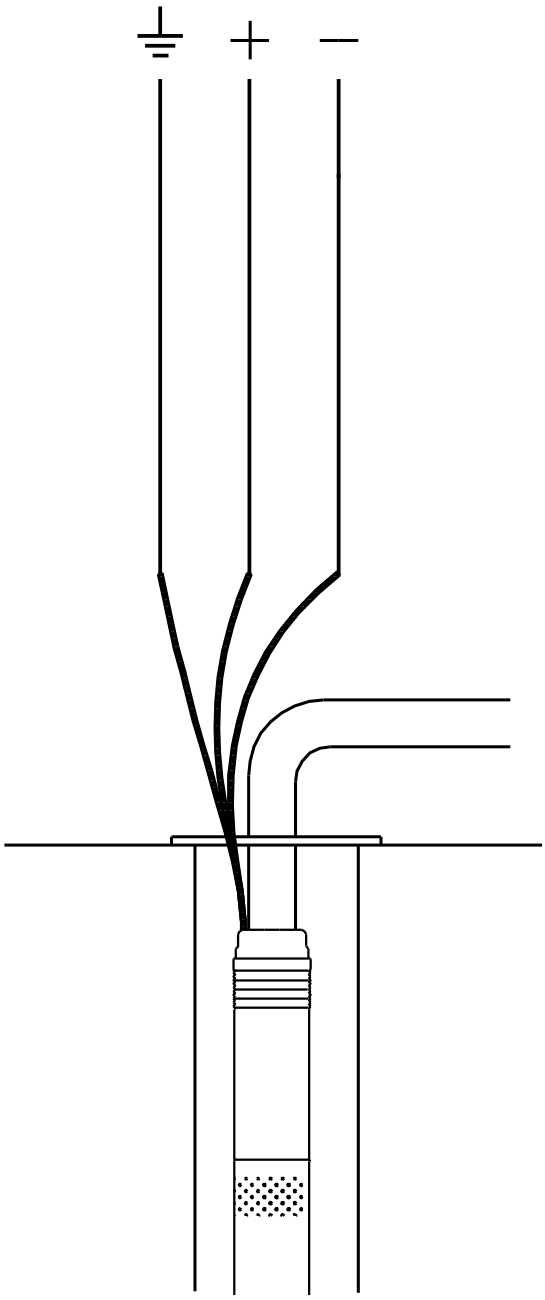

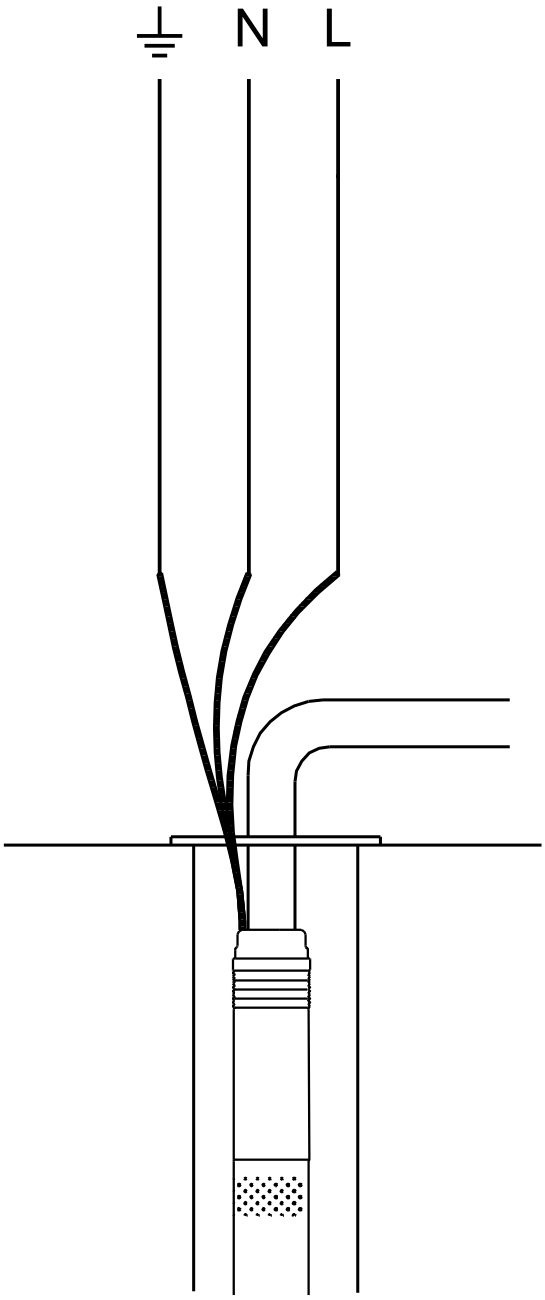

Note! All units are in [mm] unless others are stated.

Company name: World Vision International in Somaliland
Created by: Yahye Ali
Phone: +252634204935
Email: Yaxye_aadan@wvi.org
Date: 13/03/2025

93095688 IO 50 SWITCH BOX

Option 2:

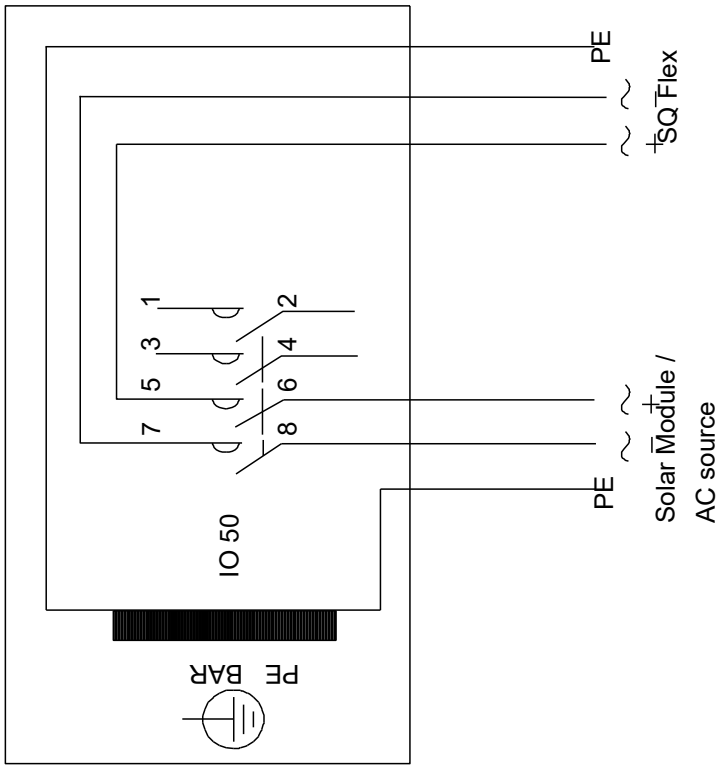

Option 1:

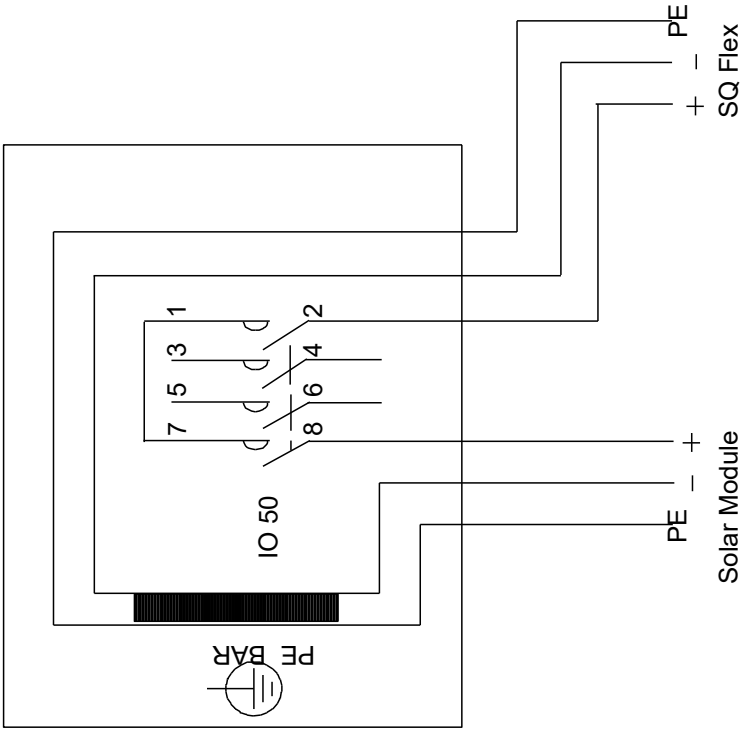

Note! All units are in [mm] unless others are stated.

Company name:	World Vision International in Somaliland
Created by:	Yahye Ali
Phone:	+252634204935
Email:	Yaxye_aadan@wvi.org
Date:	13/03/2025

92799796 CU 202

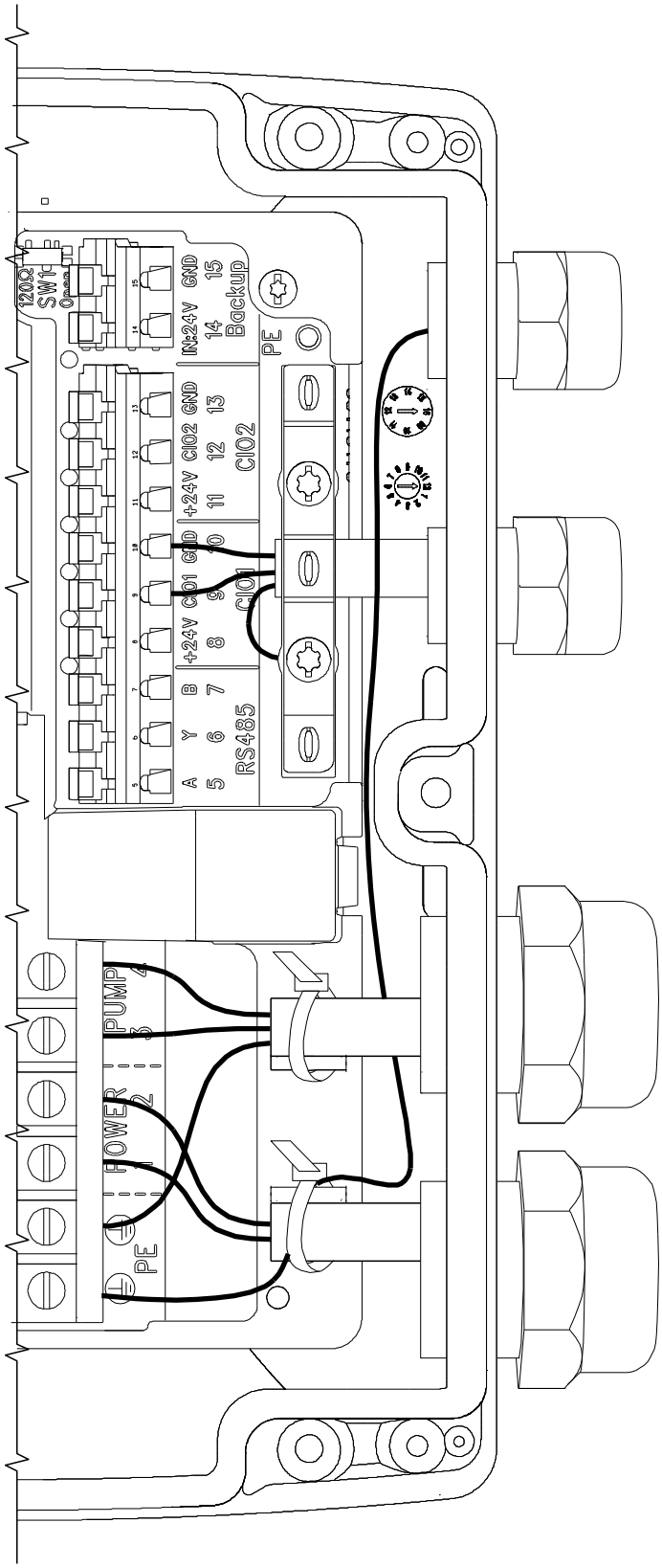

Note! All units are in [mm] unless others are stated.

Company name: World Vision International in Somaliland
Created by: Yahye Ali
Phone: +252634204935
Email: Yaxye_aadan@wvi.org
Date: 13/03/2025

95027342 SQF 5A-7

Input - summary

Flow: 25m³/day ()
Month for sizing: July
Static lift above ground: 45 m
Dynamic water level: 2 m
Sun tracking: No (fixed)
Location: Hargeysa, Maroodi Jeeh, Somalia
Latitude: 56.3859 DD, Longitude: 44.567 DD

Products

Pump: SQF 5A-7, 1 x 95027342
Solar module: 7 x NN 370W
Switch box / control unit: IO 50 SWITCH BOX, 1 x 93095688
Switch box / control unit: CU 202, 1 x 92799796

Sizing results - summary

Water production, Peak flow and Price
Total water production per year: 9590 m³
Avg. water production per day: 26.3 m³/day
Average water production per watt per day: 10.1 l/Wp/day

Solar module configuration:
Number of solar modules in series: 7, in parallel: 1
Solar array rated power: 2.59 kW
Solar array rated volts: 238 V
Sun tracking: No (fixed)
Tilt angle: 55 deg.

AC power (backup) - water production
Recommended minimum output: 1.5 kW
AC 115 V: Produces: 2.894 m³/h
AC 230 V: Produces: 4.564 m³/h

Typical performance at solar radiation 800 W/m²
Flow: 4.6 m³/h
Total head: 47.3 m

Cables and pipes:
Pump cable length: 12 m
Pump cable size: 0.75 mm²
Total cable loss: 2.3 %

Material, riser pipe: PEH
Pipe length of riser pipe: 2 m
Total friction losses: 0.278 m

System performance - monthly average

	Jan	Feb	Mar	Apr	May	Jun	Jul	Aug	Sep	Oct	Nov	Dec
Water production [m³/day]	22.6	28.8	31.1	30.8	32.6	33.4	31.4	31.7	28.4	19.6	12.6	12.4
Energy production Solar [kWh/day]	7.4	9.6	11.0	10.7	11.4	11.7	10.8	11.1	9.9	7.5	4.9	4.9
Radiation horizontal [kWh/m² day]	0.6	1.4	2.5	3.6	5.0	5.7	5.1	4.2	2.6	1.2	0.5	0.3
Radiation tilt [kWh/m² day]	3.1	4.2	4.8	4.7	5.0	5.2	4.8	4.9	4.3	3.3	2.1	2.0
Avg. Temp. [°C]	25.0	25.0	25.0	25.0	25.0	25.0	25.0	25.0	25.0	25.0	25.0	25.0

Data location: Latitude: 55.75 DD, Longitude: 37.56999969482422 DD

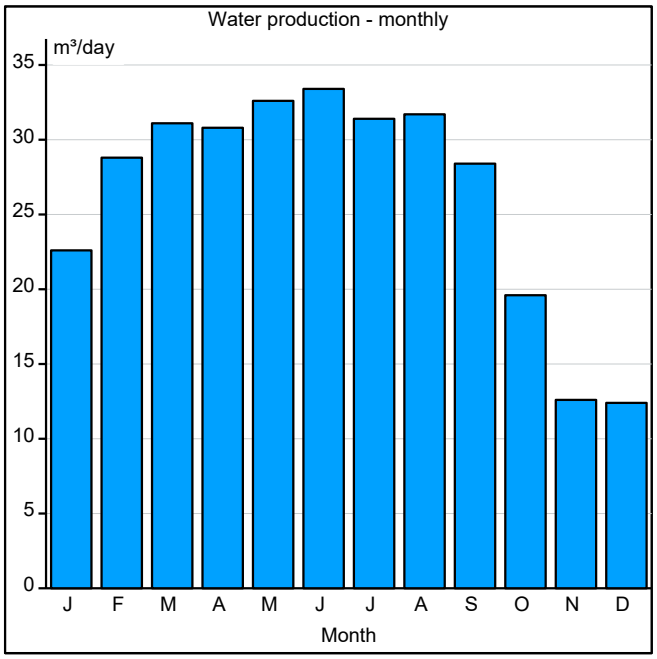

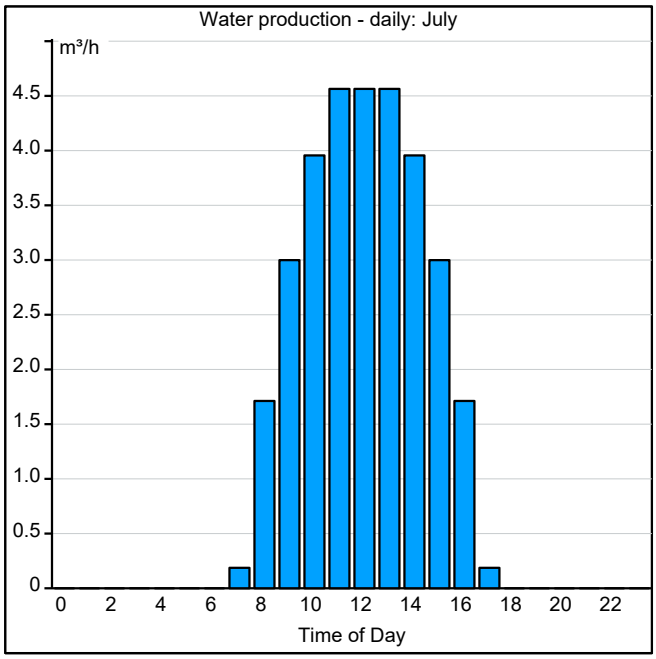

Company name:	World Vision International in Somaliland
Created by:	Yahye Ali
Phone:	+252634204935
Email:	Yaxye_aadan@wvi.org
Date:	13/03/2025

95027342 SQF 5A-7

Location Map

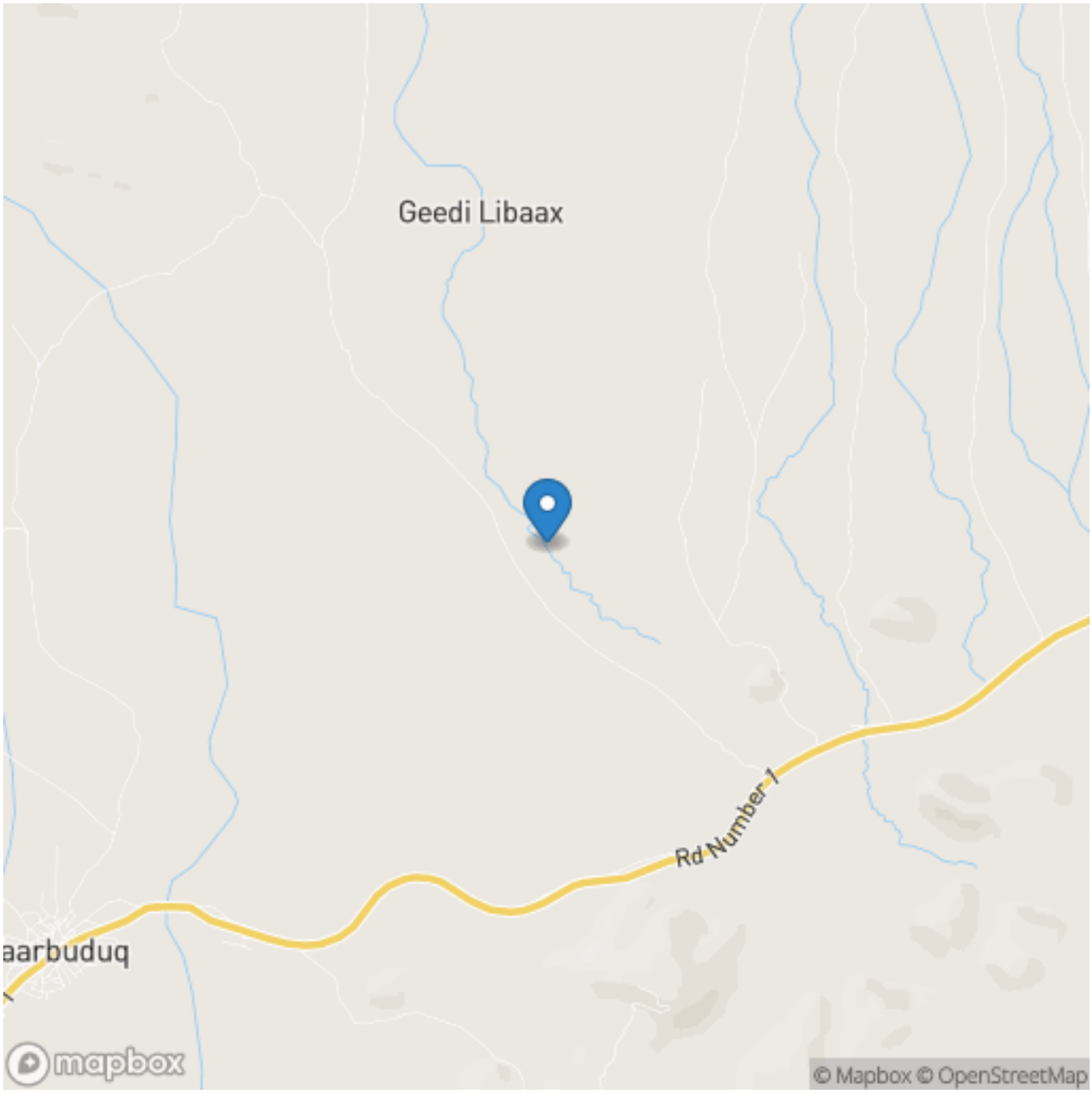

Location: Hargeysa, Maroodi Jeeh, Somalia
Latitude: 56.3859 DD, Longitude: 44.567 DD

Company name: World Vision International in Somaliland
Created by: Yahye Ali
Phone: +252634204935
Email: Yaxye_aadan@wvi.org
Date: 13/03/2025

Installation and Input

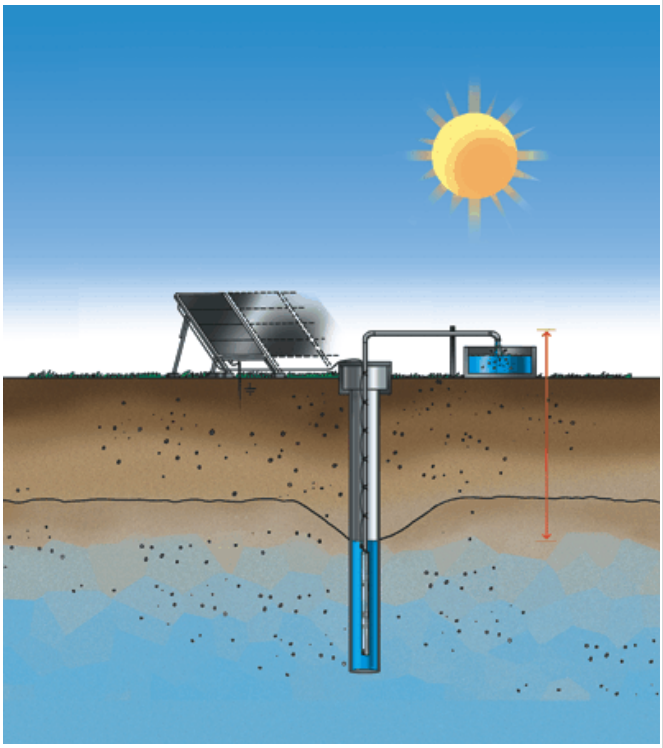

Sizing Results

Water production, Peak flow and Price
Total water production per year: 9590 m³
Avg. water production per day: 26.3 m³/day
Average water production per watt per day: 10.1 l/Wp/day

Solar module configuration:
Number of solar modules in series: 7, in parallel: 1
Solar array rated power: 2.59 kW
Solar array rated volts: 238 V
Sun tracking: No (fixed)
Tilt angle: 55 deg.

Typical performance at solar radiation 800 W/m²
Flow: 4.6 m³/h
Total head: 47.3 m

Cables and pipes:
Pump cable length: 12 m
Pump cable size: 0.75 mm²
Total cable loss: 2.3 %

Material, riser pipe: PEH
Pipe length of riser pipe: 2 m
Total friction losses: 0.278 m

Location: Hargeysa, Maroodi Jeeh, Somalia
Latitude: 56.3859 DD, Longitude: 44.567 DD

Pump Curve

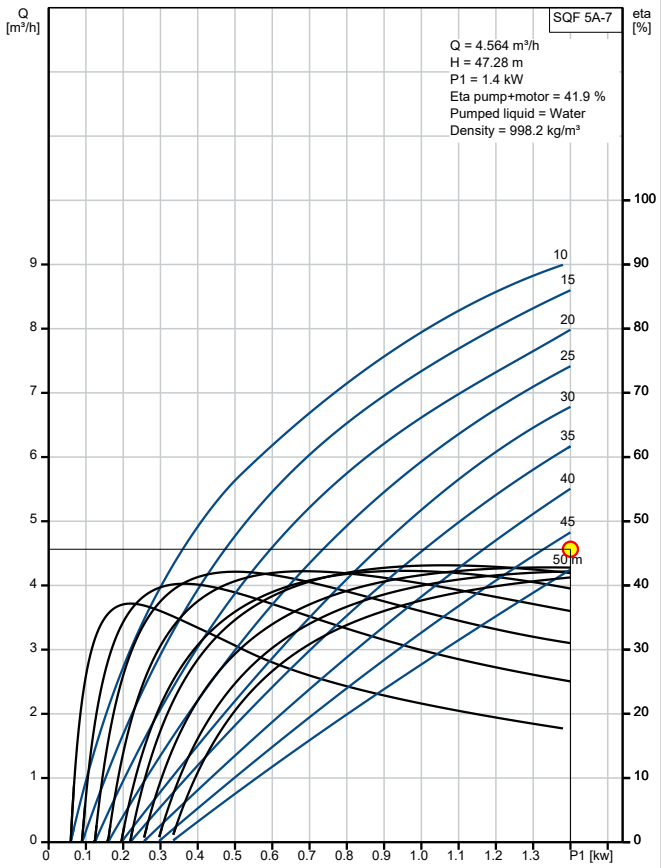
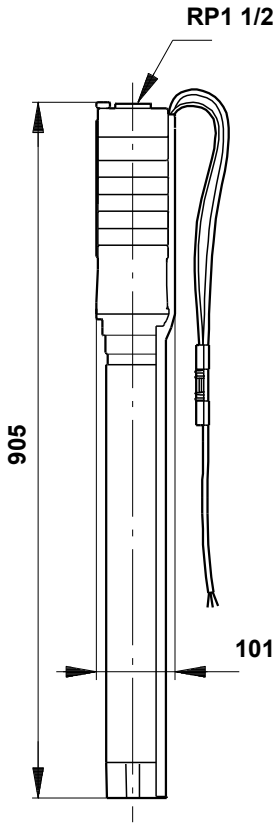
Dimensional Drawing