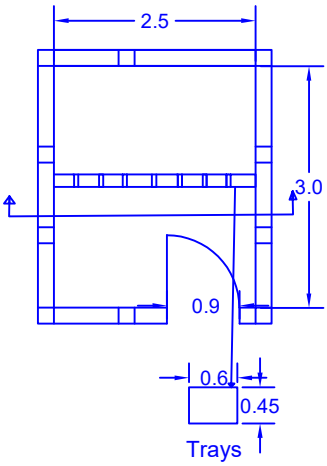

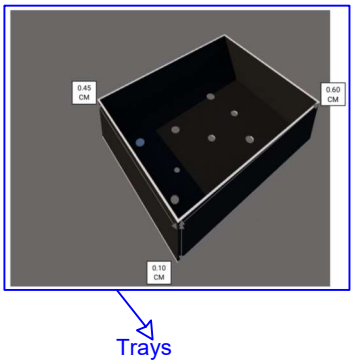

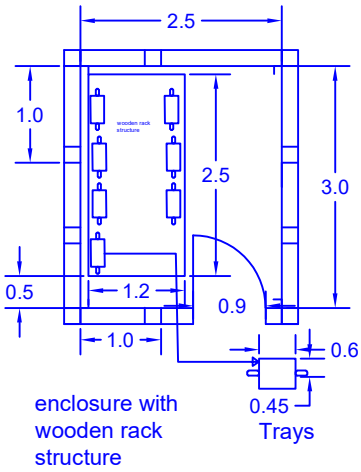

Title: Hydroponics structure plan, Funded By Oxfan and Implement by Sado

All dimentions are in meters

Date: 02/October/2024

Title: Hydroponics structure plan, Funded By Oxfan and Implement by Sado

All dimentions are in meters

Date: 02/October/2024