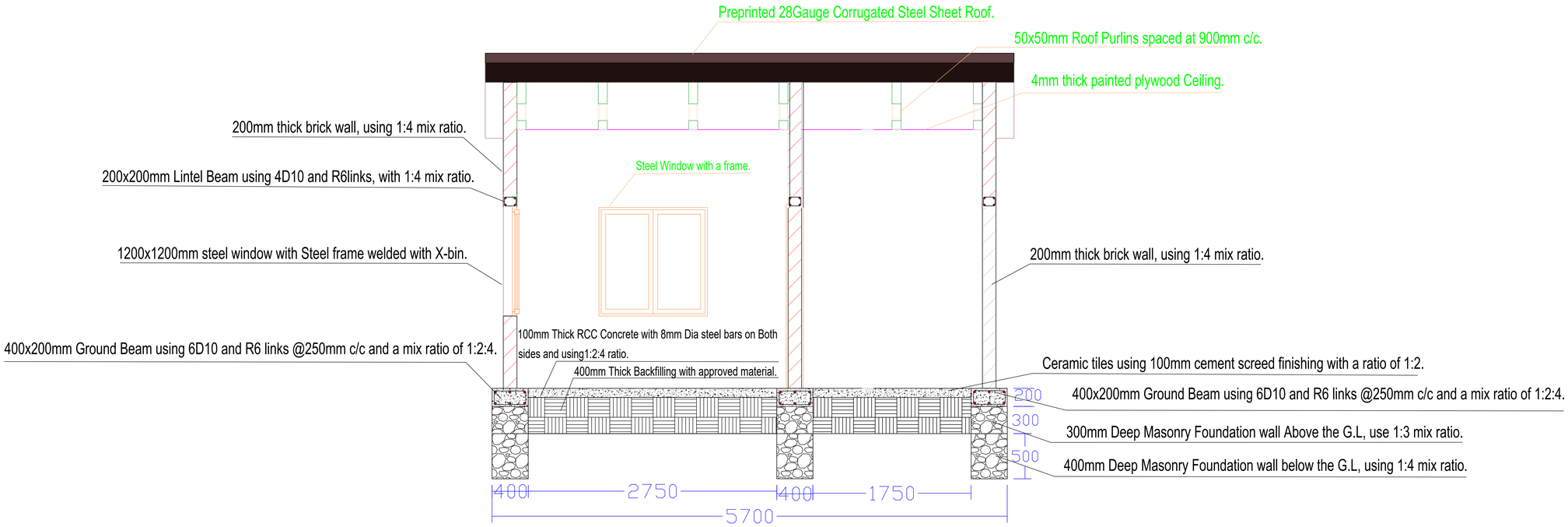

Sectional View X-X .

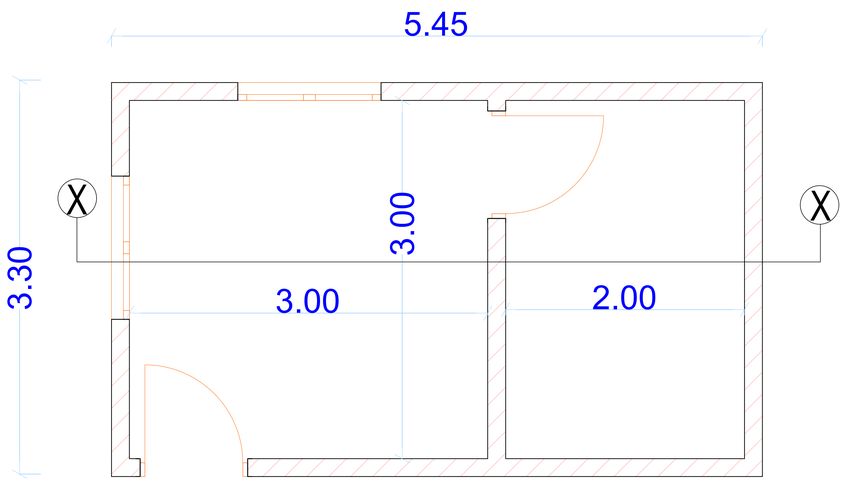

Plan- Caretaker's Room

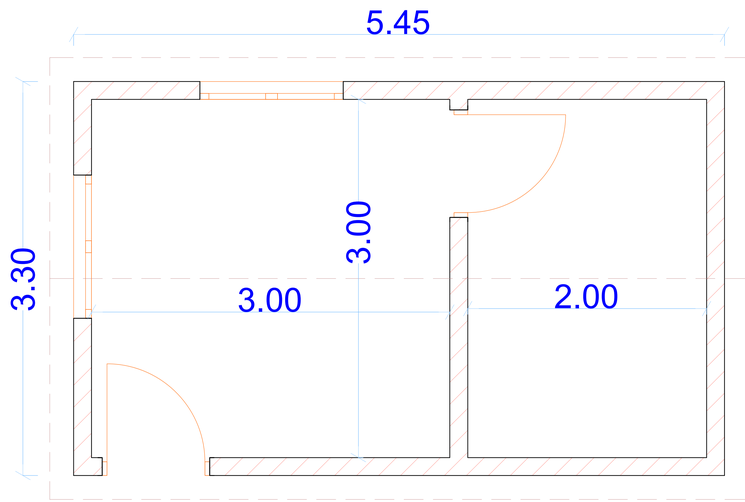

Plan View- Caretaker's Room with Roof.

Organization	Project	Location	Drawing Title	DRG. NO		
					Drawn by	Yahye Ali
					Reviewed by	Yahye Omer
World Vision	Basefund	Dabayl-wayne Secondary Boarding School.	Caretaker's Room.	1	Approved by	Wycliffe O.owino
					Scale	As Shown
					Date	July, 2025

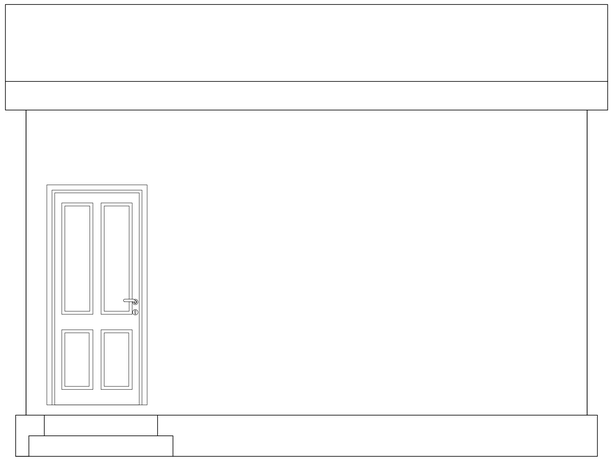

Front View- Caretaker's Room.

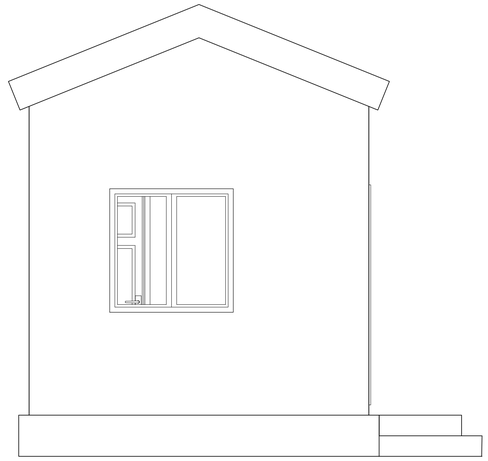

Right View- Caretaker's Room.

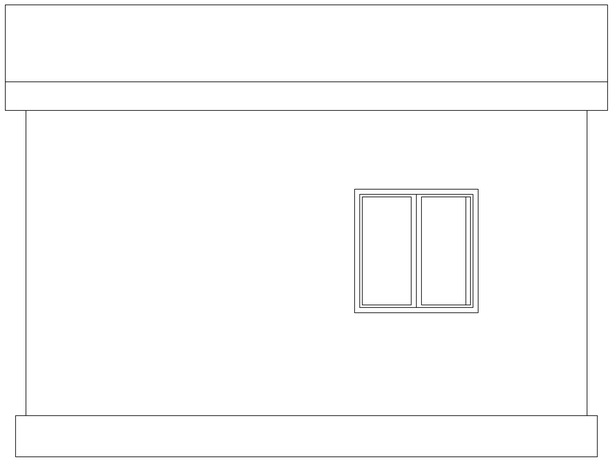

Rear View- Caretaker's Room.

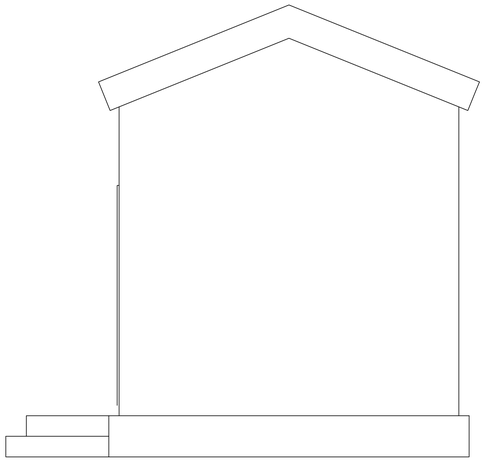

Left View- Caretaker's Room.

Organization	Project	Location	Drawing Title	DRG. NO		
					Drawn by	Yahye Ali
					Reviewed by	Yahye Omer
World Vision	Basefund	Dabayl-wayne Secondary Boarding School.	Caretaker's Room	2	Approved by	Wycliffe Owino
					Scale	As Shown
					Date	July,2025